Grille Guard

Part No. E0040B

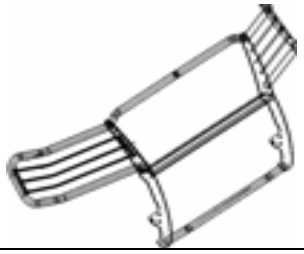

Fits: 2019-2020 MERCEDES BENZ SPRINTER VAN 2WD AND 4WD
EXCLUDING**. 3500 Dually**

RATCHET, SOCKET SET AND WRENCH SET

REMOVE CONTENTS FROM BOX. VERIFY ALL PARTS ARE PRESENT.

READ INSTRUCTIONS CAREFULLY BEFORE STARTING INSTALLATION.

M8 BOLT	18 FOOT POUND
M10 BOLT	37 FOOT POUND
M12 BOLT	65 FOOT POUND

90 Mins	Cutting Not Required	Drilling Is Required

support@trailfx.com

1- (866) 638 - 4870

POWDER COATED BLACK – 3 YEARS

PARTS LIST:

Qty	Part Description	Qty	Part Description
1	Grille Guard	2	10mm Nylon Lock Nuts
1	Driver/Left Frame Mounting Bracket	2	8-1.25mm x 40mm Hex Bolts
1	Passenger/Right Frame Mounting Bracket	4	8-1.25mm x 30mm Hex Bolts
1	Driver/Left Center Bracket	2	8-1.25mm x 25mm Button Head Bolts
1	Passenger/Right Center Bracket	8	8mm Lock Washers
2	Top Brackets	6	8mm x 24mm OD x 2mm Flat Washers
2	3/4" OD x 3/8” Tube Spacers	2	8mm x 16mm OD x 1.6mm Flat Washers
6	12-1.75mm x 35mm Hex Bolts	2	4.8 x 30 Screws
12	12mm x 32mm OD x 3mm Flat Washers	2	5mm x 18mm OD x 2mm Flat Washers
6	12mm Lock Washers	1	6mm Hex Wrench
6	12mm Hex Nuts	1	5mm Hex Wrench
2	10-1.5mm x 30mm Button Head Bolts	1	4mm Hex Wrench
4	10mm x 20mm OD x 2mm Flat Washers		

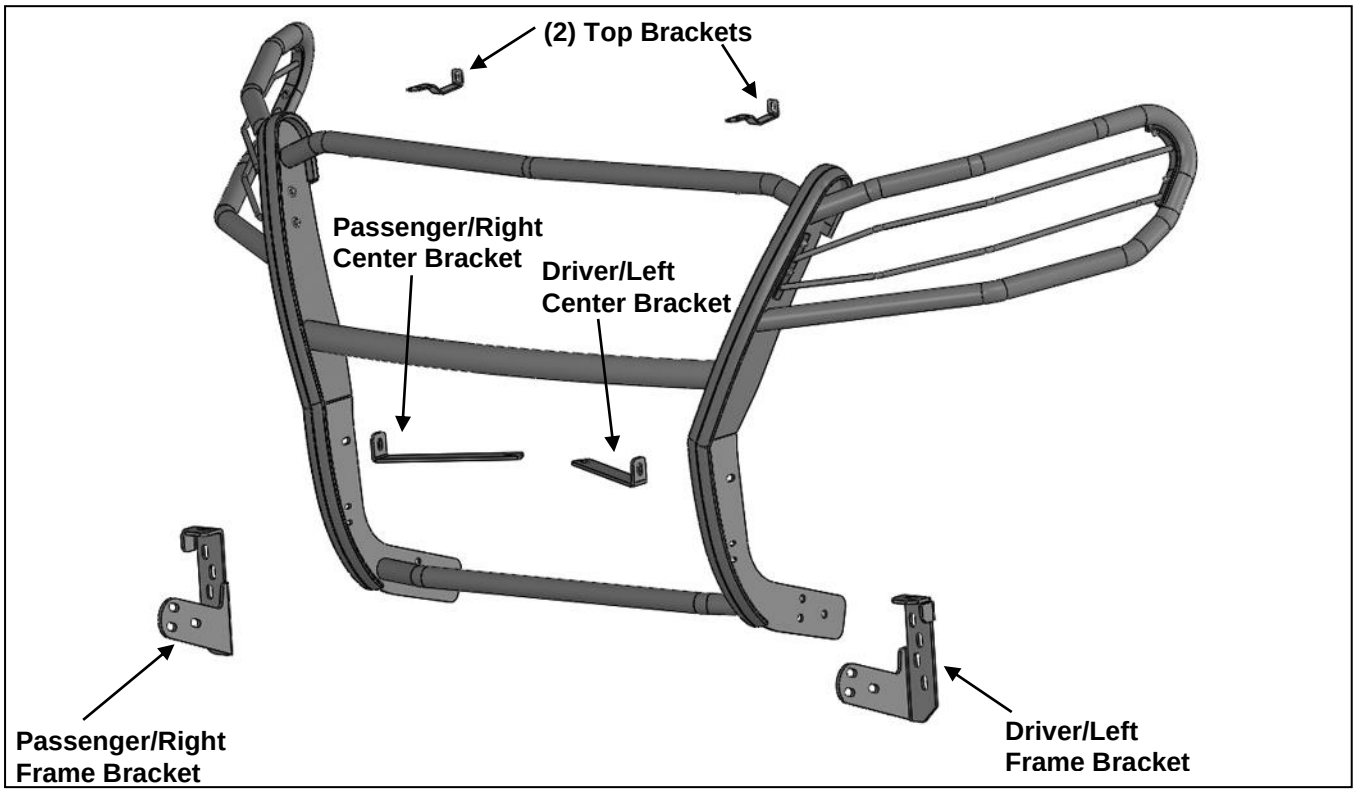

PROCEDURE:

1. **REMOVE CONTENTS FROM BOX. VERIFY ALL PARTS ARE PRESENT. READ INSTRUCTIONS CAREFULLY BEFORE STARTING INSTALLATION. DRILLING IS REQUIRED. ASSISTANCE IS RECOMMENDED.**
2. Starting on the Driver/Left side of the vehicle, locate the crossbar at the bottom of the frame, **(Figure 1)**.
   a. Remove the factory hardware attaching the crossbar on the Driver/Left side. **IMPORTANT:** Only remove the factory hardware one side at a time.
   b. Select the Driver/Left Mounting Bracket.
   c. Attach the Bracket to the frame with (2) 8mm x 30mm Hex Bolts, (2) 8mm Lock Washers and (2) 8mm x 24mm Flat Washers, **(Figures 2 & 3)**. **NOTE:** Determine the slots needed in the Mounting Bracket for model of vehicle. Do not tighten hardware.
3. Repeat **Step 2** to attach the Passenger/Right Mounting Bracket.
4. Next, remove the (2) Torx bolts in the bottom of the opening in the front bumper step area, **(Figure 4)**. **NOTE: Screws may be covered with plastic plugs.** Place a Tube Spacer into the driver/left recess in the bumper cover, **(Figure 5A & 5B)**. Position the Driver/Left Center Bracket over the Tube Spacer. Attach the flat end of the Center Bracket to the Tube Spacer and bumper with (1) 8mm x 40mm Hex Bolt, (1) 8mm Lock Washer and (1) 8mm x 24mm STD Flat Washer, **(Figure 6)**. Do not tighten hardware. Repeat this **Step** to attach the Passenger/Right Center Bracket.
5. With assistance, position the Grille Guard up to the outside of the Mounting Brackets. Attach the Grille Guard to the Brackets with (6) 12mm Hex Bolts, (12) 12mm Flat Washers, (6) 12mm Lock Washers and (6) 12mm Hex Nuts, **(Figures 7 & 8)**. Do not tighten hardware.
6. Attach the Driver/Left Center Bracket to the Grille Guard with the included (1) 10mm x 30mm Button Head Bolt, (2) 10mm Flat Washers and (1) 10mm Nylon Lock Nut, **(Figure 9)**. Do not tighten hardware. Repeat this **Step** to attach the Passenger/Right Center Bracket to Grille Guard.
7. Open the hood and remove the screw attaching the top of the grille to the Driver/Left side of the radiator core support, **(Figure 10)**.
8. Select (1) Top Bracket. Attach the Top Bracket to the grille and core support with the included (1) ST4.8 x 45 Philip Screw and (1) 5mm Flat Washer, **(Figures 11 & 12)**. Do not tighten hardware.
9. Line up the outer end of the Top Bracket with the threaded insert in the bottom of the top tube on the Grille Guard. Attach the Bracket to the tube with (1) 8mm x 25mm Button Head Bolt, (1) 8mm Lock Washer and (1) 8mm x 16mm Small Flat Washer, **(Figures 13 & 14)**.
10. Repeat **Steps 8—10** to attach the Passenger/Right Top Bracket.
11. Level and adjust the Grille Guard and tighten all hardware.
12. Do periodic inspections to the installation to make sure that all hardware is secure and tight.

To protect your investment, wax this product after installing. Regular waxing is recommended to add a protective layer over the finish. Do not use any type of polish or wax that may contain abrasives that could damage the finish.
For stainless steel: Aluminum polish may be used to polish small scratches and scuffs on the finish. Mild soap may be used also to clean the Grille Guard.
For gloss black finishes: Mild soap may be used to clean the Grille Guard.

Driver/Left Side Installation Pictured

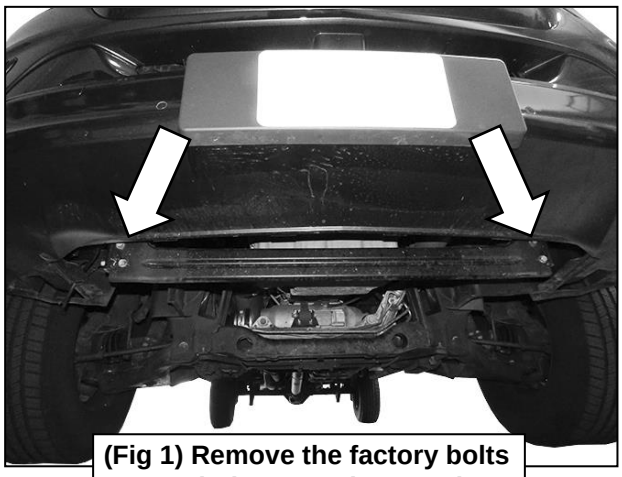

(Fig 1) Remove the factory bolts to attach the Mounting Brackets

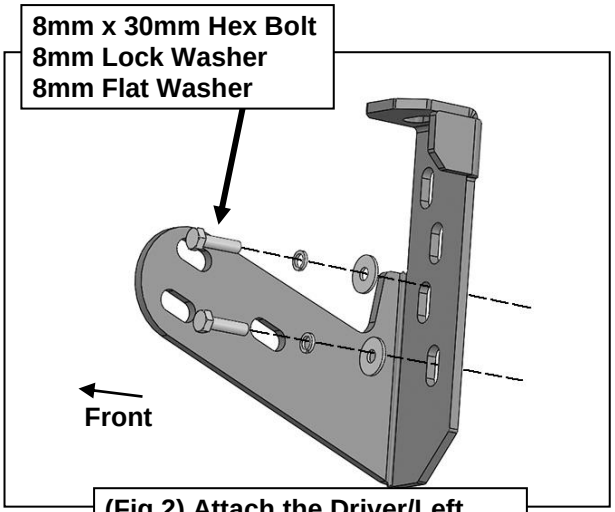

(Fig 2) Attach the Driver/Left Mounting Bracket to the frame

Driver/Left Side Installation Pictured

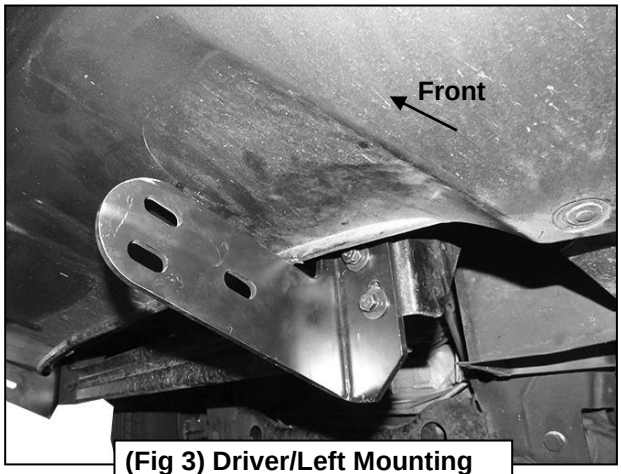

(Fig 3) Driver/Left Mounting Bracket attached to the frame

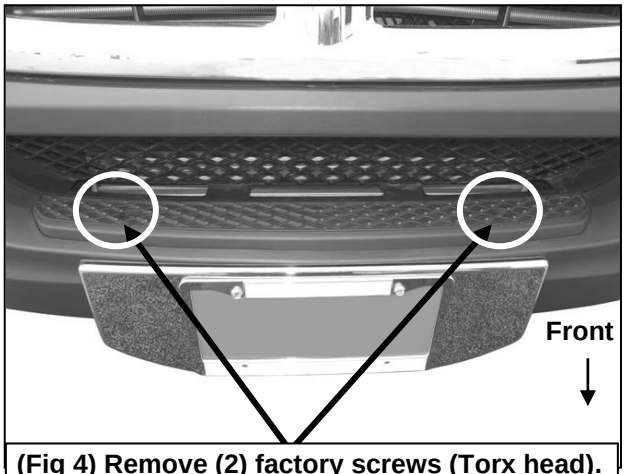

(Fig 4) Remove (2) factory screws (Torx head). NOTE: Remove plastic plugs covering screws if equipped



(Fig 5A) Tube Spacer

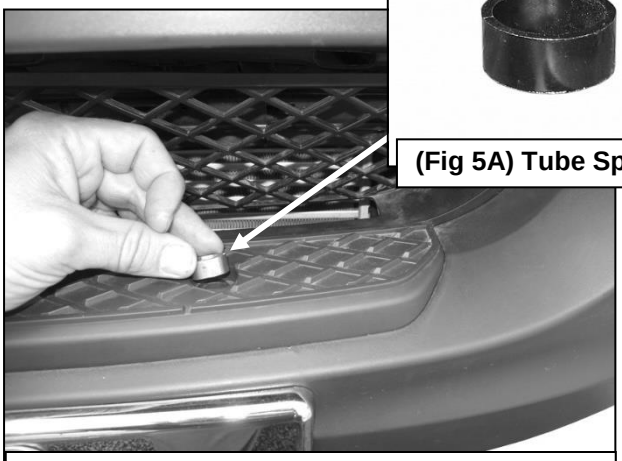

(Fig 5B) Insert Spacer into recess in bumper

8mm x 40mm Hex Bolt
8mm Lock Washer
8mm x 24mm x 2mm Flat Washer

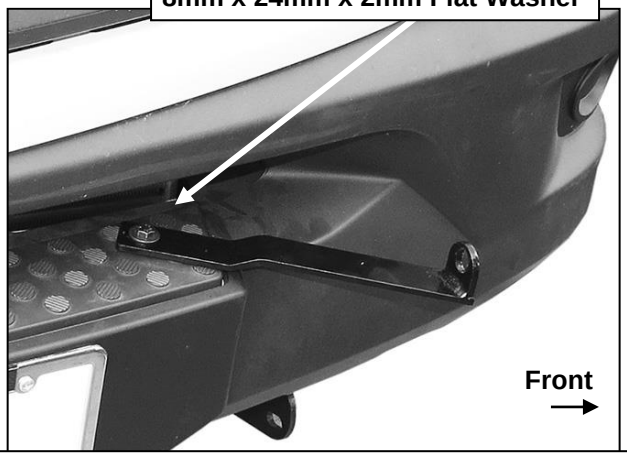

(Fig 6) Attach driver/left Center Bracket to bumper

Driver/Left Side Installation Pictured

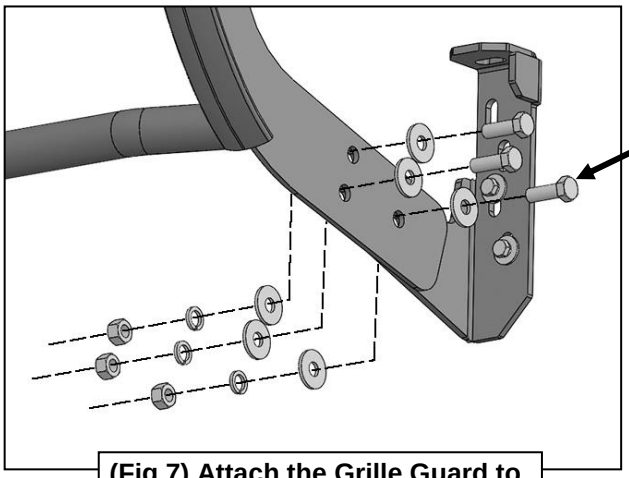

(3) 12mm Hex Bolts
(6) 12mm Flat Washers
(3) 12mm Lock Washers
(3) 12mm Hex Nuts

(Fig 7) Attach the Grille Guard to the Driver/Left Mounting Bracket



(Fig 8) Attach Grille Guard to Frame Brackets

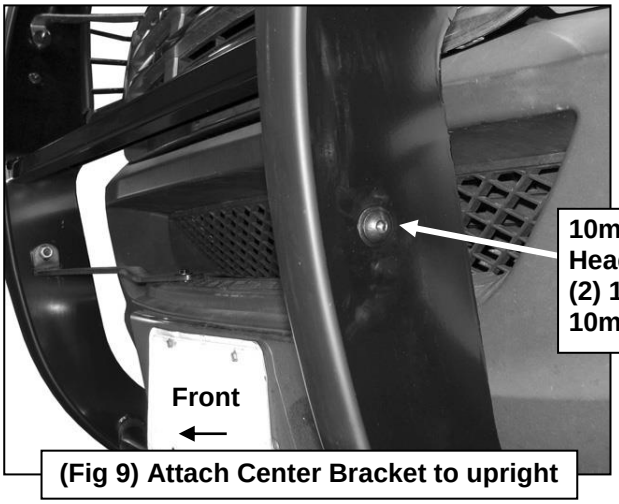

10mm x 30mm Button Head Bolt
(2) 10mm Flat Washers
10mm Nylon Lock Nut

(Fig 9) Attach Center Bracket to upright

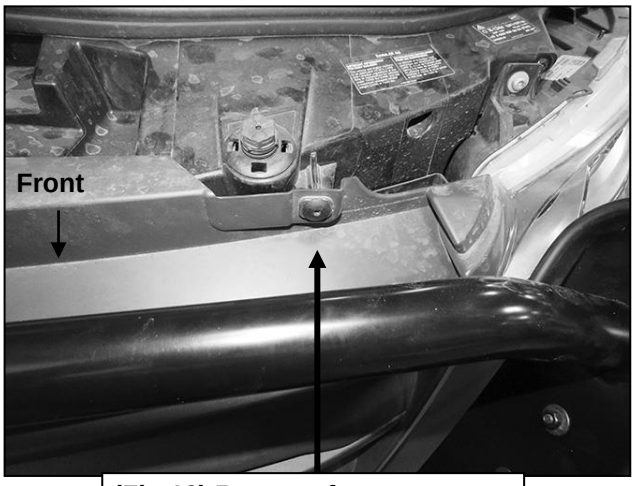

(Fig 10) Remove factory screw

Driver/Left Side Installation Pictured

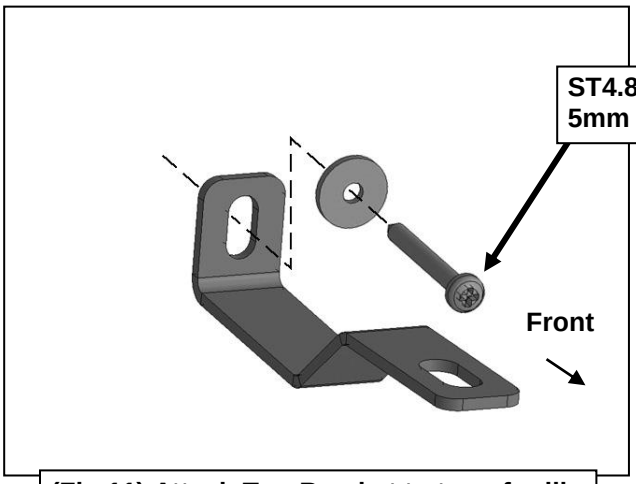

(Fig 11) Attach Top Bracket to top of grille

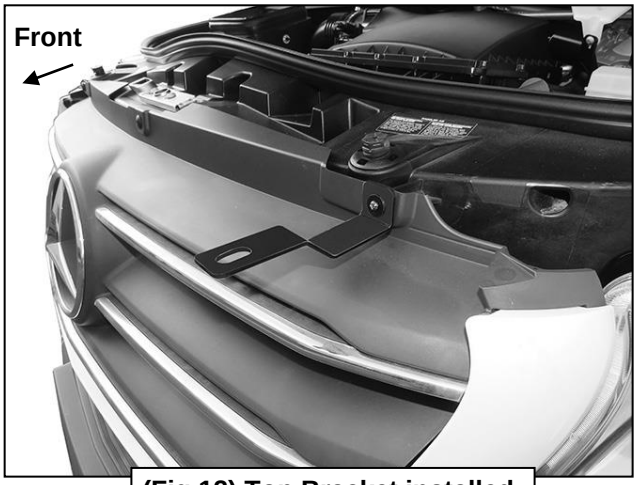

(Fig 12) Top Bracket installed

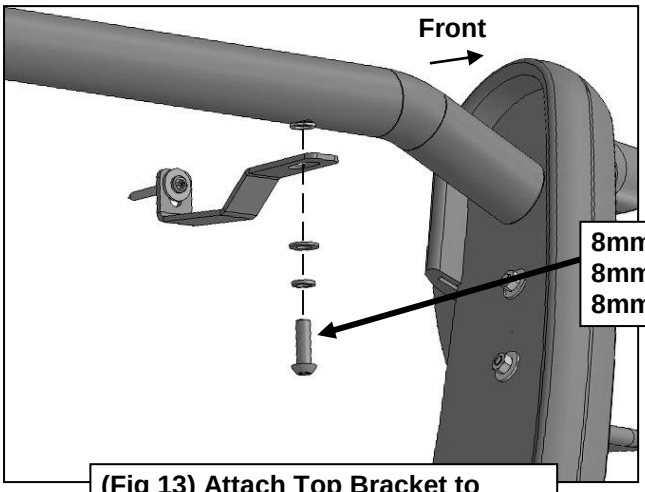

(Fig 13) Attach Top Bracket to bottom of top tube on Grille Guard



(Fig 14) Top Bracket installed

PRODUCT CARE

- Periodically check the product to ensure all fasteners are tight and components are intact.
- Regular waxing is recommended to protect the finish of the product.
- **Use ONLY Non-Abrasive automotive wax.** Use of any soap, polish or wax that contains an abrasive is detrimental and can scratch the finish leading to corrosion.
- Mild soap may be used to clean the Black finish product.

FAQ's

1. **Hardware and mounting brackets are not aligning properly**

   Ensure that hardware is being used on the correct side of the vehicle. In some cases, the hardware may appear same for driver or passenger side but may alter the alignment of mounting location. Check mounting brackets for both sides.

2. **Grille Guard is not aligning with vehicle**

   Grille Guard Brackets may be interchanged or reversed (Driver / Passenger Side). Check Brackets for each side as well ensure the proper hardware has been used for each side.

3. **Products are thumping / rattling after installation.**

   Ensure that all required mounting brackets / hardware's are installed & tighten correctly. Suggest using white lithium / regular grease between metal to metal contact.

4. **Missing / Excess Hardware.**

   Recheck hardware count as per the part list.

5. **Product not installing properly.**

   Ensure the Year / Make / Model as well as cab and bed dimensions are correct for the application. Review all steps for installation to ensure they were followed correctly.

6. **Who should be contacted for questions regarding product / installation assistance?**

   www.trailfx.com / support@trailfx.com 1-(866) 638-4870

Check out these other TrailFX Products! **www.trailfx.com**



BED LINERS



TONNEAU COVERS



HOOD PROTECTORS



OVAL STEP BARS

Keystone Automotive Operations Inc. (KAO) warrants this product to be free of defects in material and workmanship at the time of purchase by the original retail consumer. KAO disclaims any other warranties, express or implied, including the warranty of fitness for a particular purpose or an intended use. If the product is found to be defective, KAO may replace or repair the product at our option, when the product is returned prepaid, with proof of purchase. Alteration to, improper installation, or misuse of this product voids the warranty. KAO's liability is limited to repair or replacement of products found to be defective, and specifically excludes liability for any incidental or consequential loss or damage.